11531-134th Street
Surrey, BC V3R 0H5

NSP
North Scaffold Products Ltd.

# PRODUCT SPECIFICATIONS

## Screwjack Hollow

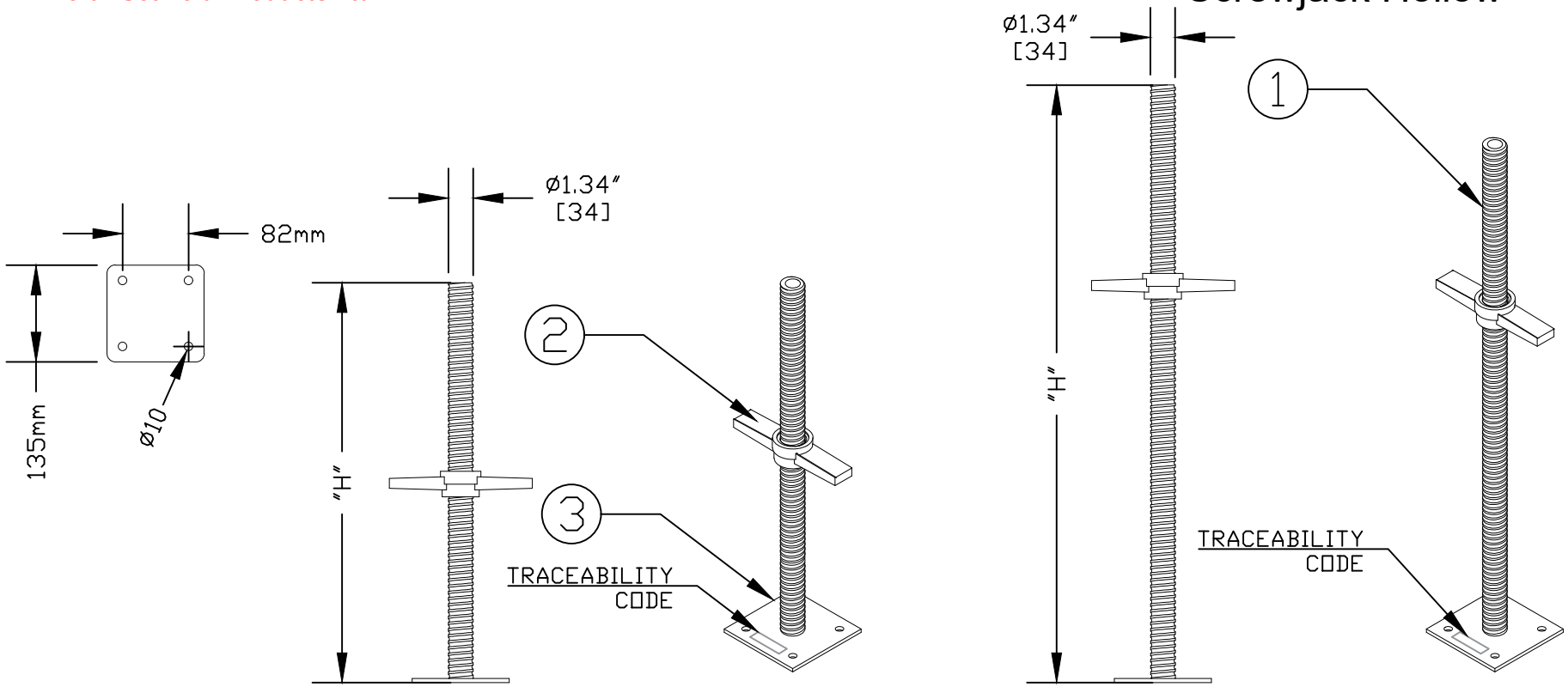


SCREWJACK HOLLOW DIAGRAM

NOTES:
1. THE STATE COLUMN DETERMINES WETHER OR NOT THE THREADED SHAFT IS SOLID OR HOLLOW
2. MAXIMUM LOAD IS WITH A 4:1 SAFETY FACTOR
3. ALTERNATIVE UNITS IN MM UNLESS OTHERWISE LABELED

TRACEABILITY CODE:
NSP02180801
- BATCH CODE WITH SUPPLIER IDENTIFICATION CODE
- YEAR CODE
- MONTH CODE
- NORTH SCAFFOLD PRODUCTS LTD.

| ITEM NO. | HEIGHT "H" | STATE | WEIGHT | MAX LOAD | COMPONENTS | |
|---|---|---|---|---|---|---|
| 02SJH024E | 2'-0" [609.6] | HOLLOW | 4.34kg/9.57lbs | 6000LBS @18" MAX | S.NO. | DESCRIPTION |
| | | | | | 1 | THREADED SHAFT |
| 02SJH030E | 2'-6" [762.0] | HOLLOW | 6.21kg/13.7kgs | – | 2 | SCREWJACK NUT |
| | | | | | 3 | BASEPLATE |
| 02SJH036E | 3'-0" [914.4] | HOLLOW | 8.08kg/17.8kgs | 3800LBS @30" MAX | | |
| | | | | | | |